NEWS RELEASE

THE YOKOHAMA RUBBER CO., LTD.
36-11, Shimbashi 5-chome, Minato-ku,
Tokyo 105-8685, Japan

December 19, 2012
For immediate release

Contact:
Corporate Communications Dept.
Phone: 81-3-5400-4531
Fax: 81-3-5400-4570

YOKOHAMA Develops Tire Design Technology That Reduces Aerodynamic Drag on Vehicles

Tokyo - The Yokohama Rubber Co., Ltd. announced today that it has developed tire design technology that lowers aerodynamic drag. The new technology takes the environmental contribution made by reducing rolling resistance a step further by improving the flow of air around the tires while a vehicle is in motion in order to raise fuel efficiency.

Air flows turbulently inside the wheel wells when a vehicle is moving, and some of this air flows out alongside the vehicle and causes aerodynamic drag to worsen. YOKOHAMA has tackled this problem by pursuing research using both aerodynamic simulations and wind tunnel testing.* Aerodynamic simulation technology was developed in 2010 to enable air flow around tires to be simulated under the conditions envisaged to be encountered in actual use (i.e., with tires mounted in the wheel wells and revolving), and the scope of simulation is presently being expanded to include the entire vehicle.

These simulations and wind tunnel tests resulted in a tire design that reduces the aerodynamic drag on a vehicle. An analysis was made of a tire (fin tire) with fin-shaped protuberances on the side facing inwards when mounted. The results showed that while drag on the tire itself was worse than on a normal tire, drag on the vehicle as a whole was considerably reduced. This was found to be attributable to changes in pressure in the wheel wells caused by the spiraling flow of air induced in the direction of the tire's rotation by the fins. Going forward, YOKOHAMA will conduct further research on the relationship between tire shape and air flow, alongside assessing performance on actual vehicles, as it pursues its development of tires that reduce the aerodynamic drag on vehicles overall as well as just improved tire performance.

This technology was unveiled today at the 26th Computational Fluid Dynamics Symposium being held at the National Olympics Memorial Youth Center in Tokyo until December 20, and is also to be presented at the Tire Technology Expo 2013 in Cologne, Germany, from February 5, 2013.

*A test facility for artificially generating small-scale flows to reproduce and observe actual conditions.

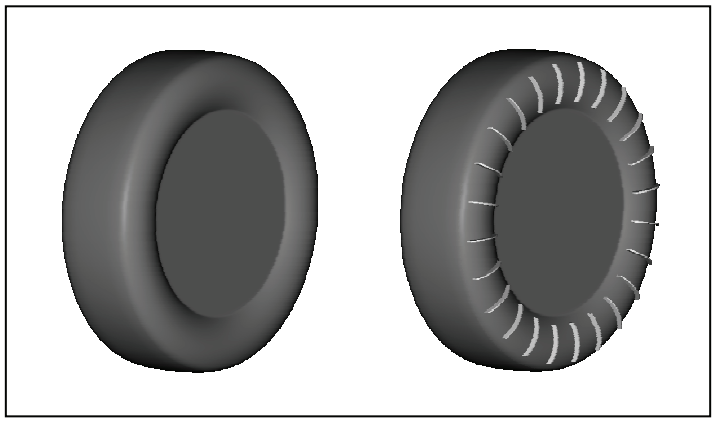

Normal tire (left) and fin tire

Improvement in fin tire's drag coefficient (C_d): results of aerodynamic simulation and wind tunnel testing (where normal tire = 0, 1 count = 1/1000)

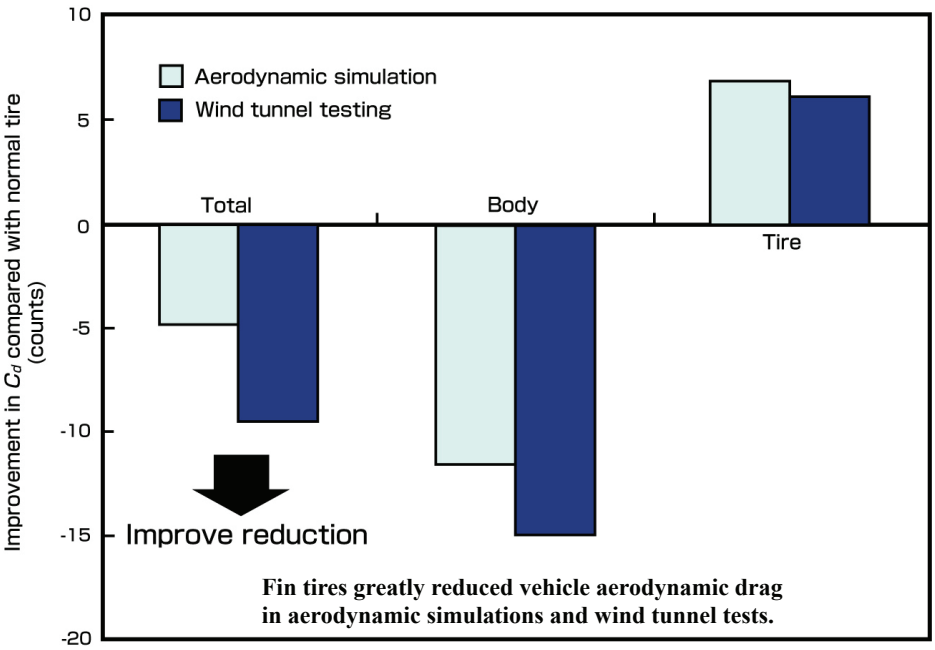

Fin tires greatly reduced vehicle aerodynamic drag in aerodynamic simulations and wind tunnel tests.

Air flow in wheel wells with and without fin tires: analysis by aerodynamic simulation

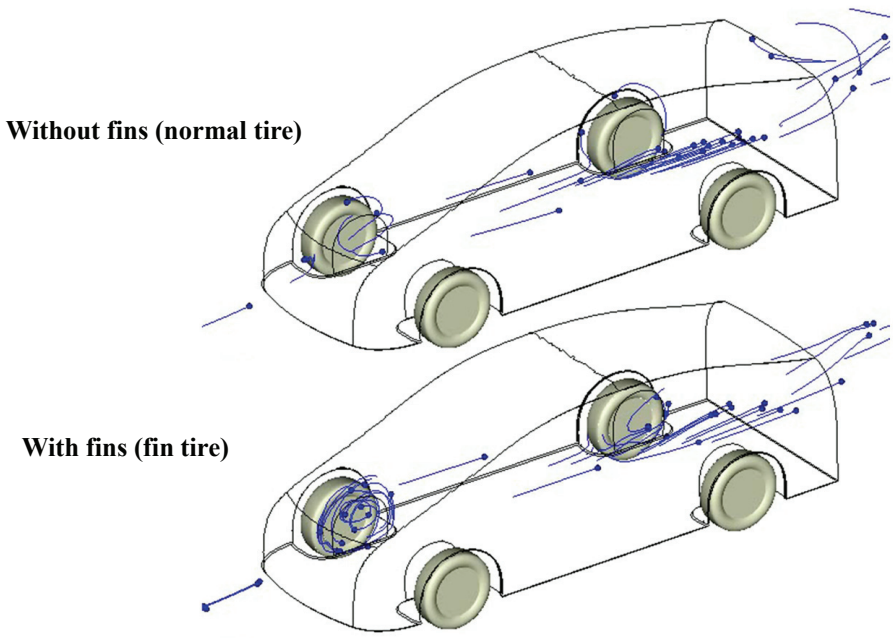

Fin tires induce spiraling air flows in the direction of rotation that alter the pressure in the wheel well and impart forward force on the vehicle.